23 November 2026

Kemo Electronic GmbH
Rolf Wittig
Leher Landstr. 20
27607 Geestland
Germany

Phone: +49 4743 9338-0
Fax: +49 4743 9338-22

http://www.kemo-electronic.de
email: info@kemo-electronic.de

HR.Nr. HRB 111 486
UstNr: DE 814 380 369

FG002N - Power control 230 V/AC



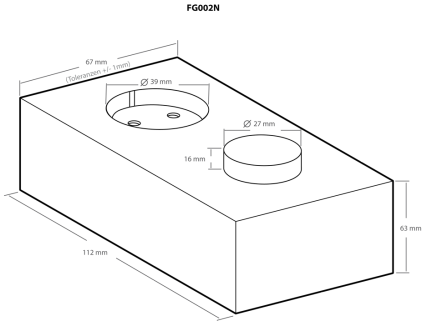

The output of ohmic or inductive loads 230 V/AC, which are controllable by phase control is infinitely variable with it. The regulator has a CE approval up to a load of 400 W. It may also control loads up to 800 W, but then an additional interference filter has to be connected in series. It is also possible to control temporarily (max. 3 seconds) loads up to 1600 W (e.g. in case of high starting currents for electric motors, only with additional interference filter connected in series).
Ohmic loads are e.g. electric heatings, soldering irons, etc.. Inductive loads are e.g. motors with carbon brushes (e.g. kitchen machines), electromagnets, vibrating tables, etc.. It is not possible to connect devices, which already have built-in control electronics!
Only for indoor use!

Technical Data:
Operating voltage: 180 - 240 V/AC
Load: max. 400 W
Load with an additional interference filter: max. 800 W
Short load capacity: (max. 3 sec) 1600 W
Dimensions: approx. 112 x 67 x 63 mm (without connector)