Kemo Electronic GmbH
Rolf Wittig
Leher Landstr. 20
27607 Geestland
Germany

Phone: +49 4743 9338-0
Fax: +49 4743 9338-22

http://www.kemo-electronic.de
email: info@kemo-electronic.de

HR.Nr. HRB 111 486
UstNr: DE 814 380 369

Z004 - Bonnet switch for anti marten devices in cars

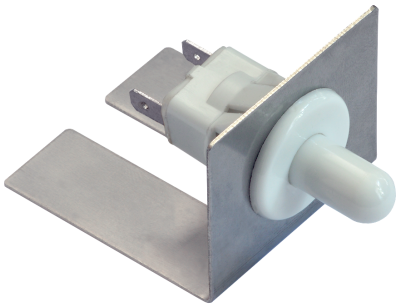

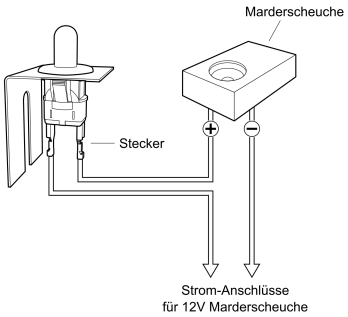

Please place the switch in a way, that the pin is 60 - 80% pressed when the hood is closed. Then the connected anti marten device turns on. The pin must not be pressed to the limit, because the switch can then be broken when the hood is slammed vigorously (the pin then strikes against the stopper and pushes the switch bottom out).

Package Contents:
1 bonnet switch (1 x ON)
1 stainless steel mounting bracket
2 female terminal 4,8 mm