26 kwietnia 2024

Kemo Electronic GmbH
Mato Vukovic
Leher Landstr. 20
27607 Geestland
Germany

Phone: +49 4743 9338-0
Fax: +49 4743 9338-22

http://www.kemo-electronic.de
email: info@kemo-electronic.de

HR.Nr. HRB 111 486
UstNr: DE 814 380 369

STG15 - Connector case with socket

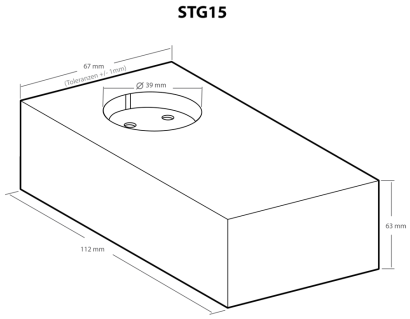

Case with injection-moulded shock-proof plug and injection-moulded shock-proof socket (each with grounding bow).